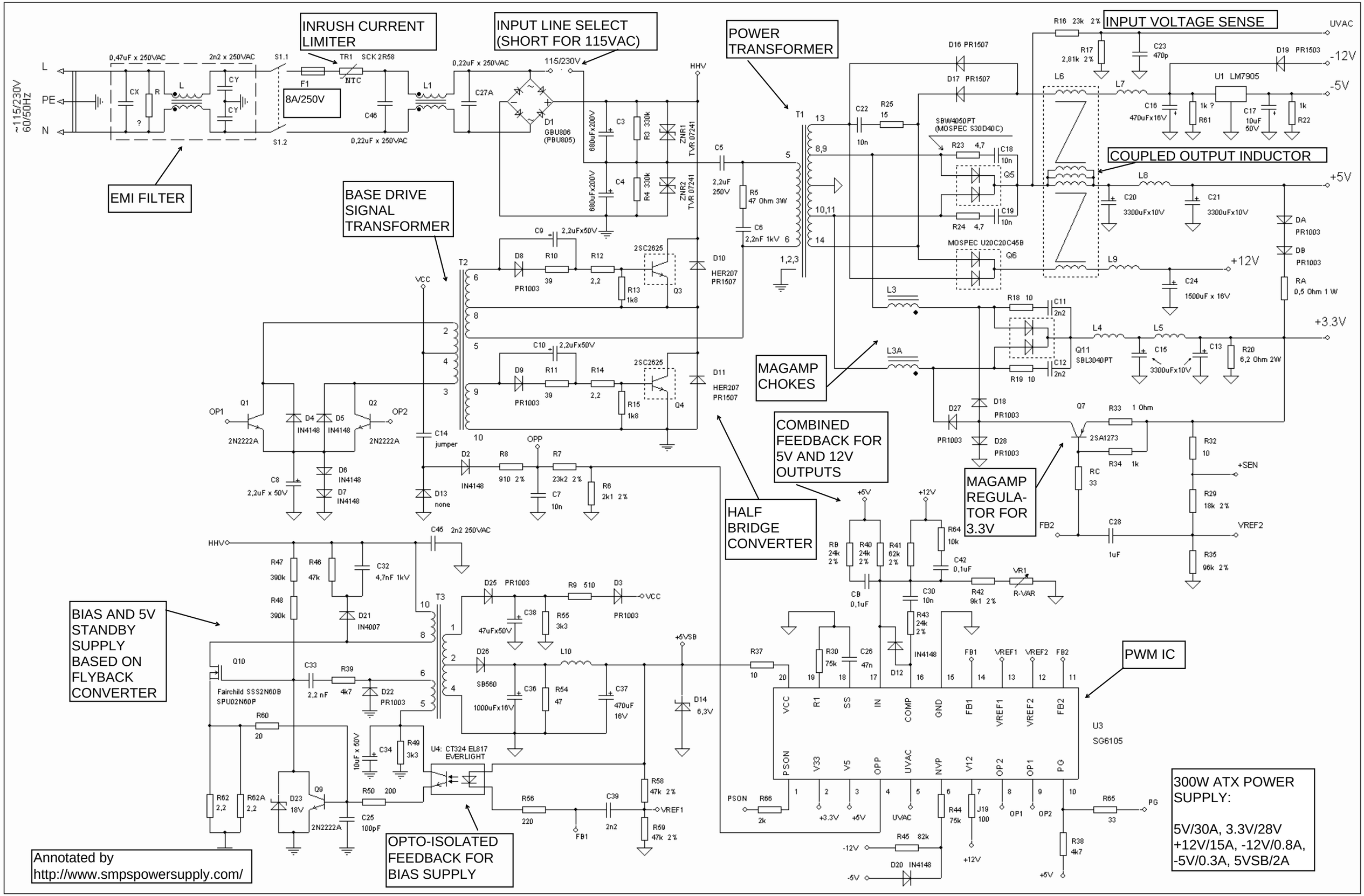
INRUSH CURRENT LIMITER
INPUT LINE SELECT (SHORT FOR 115VAC)
POWER TRANSFORMER
INPUT VOLTAGE SENSE
EMI FILTER
BASE DRIVE SIGNAL TRANSFORMER
COUPLED OUTPUT INDUCTOR
MAGAMP CHOKES
COMBINED FEEDBACK FOR 5V AND 12V OUTPUTS
HALF BRIDGE CONVERTER
MAGAMP REGULA-TOR FOR 3.3V
BIAS AND 5V STANDBY SUPPLY BASED ON FLYBACK CONVERTER
PWM IC
OPTO-ISOLATED FEEDBACK FOR BIAS SUPPLY
~115/230V 60/50Hz
L
PE
N
0,47uF x 250VAC
2n2 x 250VAC
S1.1
S1.2
TR1 SCK 2R58
NTC
F1
8A/250V
0,22uF x 250VAC
115/230V
HHV
D1 GBU806 (PBU805)
680uFx200V
C3
C4
R3 330k
R4 330k
ZNR1 TVR 07241
ZNR2 TVR 07241
C5 2,2uF 250V
R5 47 Ohm 3W
C6 2,2nF 1kV
T1
D16 PR1507
D17 PR1507
SBW4050PT (MOSPEC S30D40C)
MOSPEC U20C20C45B
Q5
Q6
R16 23k 2%
R17 2,81k 2%
C23 470p
D19 PR1503
U1 LM7905
C16 470uFx16V
C17 10uF 50V
R61 1k ?
R22 1k
UVAC
-12V
-5V
+5V
+12V
+3.3V
DA PR1003
DB PR1003
RA 0,5 Ohm 1 W
C24 1500uF x 16V
Q11 SBL3040PT
R20 6,2 Ohm 2W
R33 1 Ohm
2SA1273
R32 10
R29 18k 2%
R35 96k 2%
+SEN
VREF2
FB2
C28 1uF
RC 33
T2
VCC
C9 2,2uFx50V
C10 2,2uFx50V
D8 PR1003
D9 PR1003
R10 39
R11 39
R12 2,2
R14 2,2
R13 1k8
R15 1k8
2SC2625
Q3
Q4
D10 HER207 PR1507
D11 HER207 PR1507
OP1
OP2
Q1 2N2222A
Q2 2N2222A
D4 IN4148
D5 IN4148
D6 IN4148
D7 IN4148
C8 2,2uF x 50V
C14 jumper
D13 none
OPP
D2 IN4148
R8 910 2%
R7 23k2 2%
C7 10n
R6 2k1 2%
C45 2n2 250VAC
R47 390k
R48 390k
R46 47k
C32 4,7nF 1kV
D21 IN4007
T3
D25 PR1003
R9 510
D3 PR1003
C38 47uFx50V
R55 3k3
D26 SB560
L10
C36 1000uFx16V
R54 47
C37 470uF 16V
+5VSB
D14 6,3V
Q10 Fairchild SSS2N60B SPU02N60P
C33 2,2 nF
R39 4k7
D22 PR1003
R60 20
C34 10uF x 50V
R49 3k3
U4: CT324 EL817 EVERLIGHT
R62 2,2
R62A 2,2
D23 18V
Q9 2N2222A
R50 200
C25 100pF
R56 220
C39 2n2
FB1
R58 47k 2%
R59 47k 2%
R37 10
R30 75k
C26 47n
D12 IN4148
R40 24k 2%
R41 62k 2%
R64 10k
C42 0,1uF
R42 9k1 2%
VR1 R-VAR
C30 10n
R43 24k 2%
C8 0,1uF
R44 75k
J19 100
R45 82k
D20 IN4148
R66 2k
PSON
R65 33
PG
R38 4k7
U3 SG6105
VCC R1 SS IN COMP GND FB1 VREF1 VREF2 FB2
PSON V33 V5 OPP UVAC NVP V12 OP2 OP1 P.G
300W ATX POWER SUPPLY:
5V/30A, 3.3V/28V
+12V/15A, -12V/0.8A,
-5V/0.3A, 5VSB/2A
Annotated by
http://www.smpspowersupply.com/